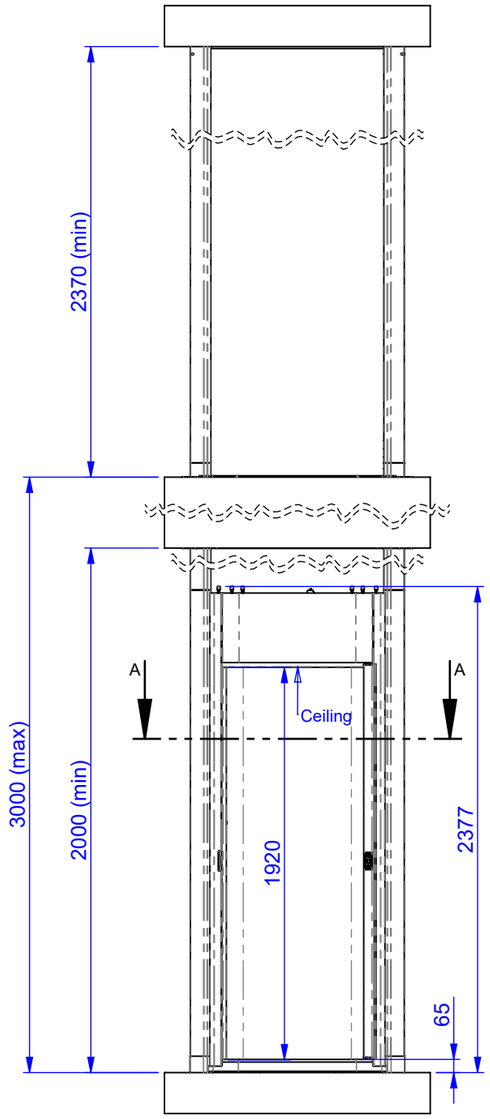

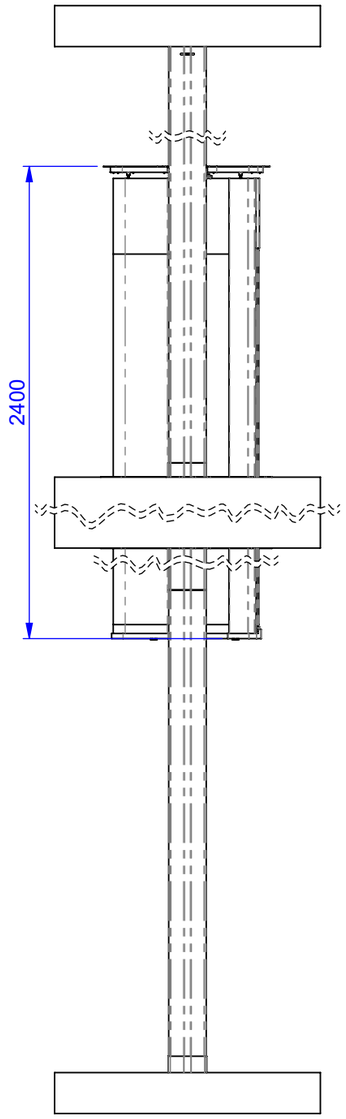

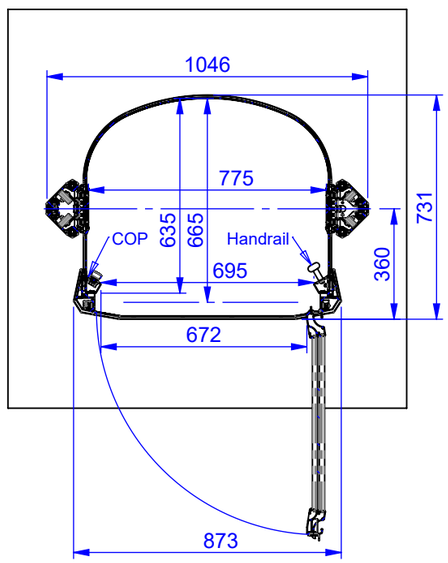

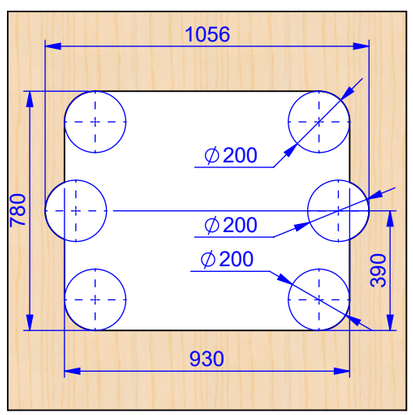

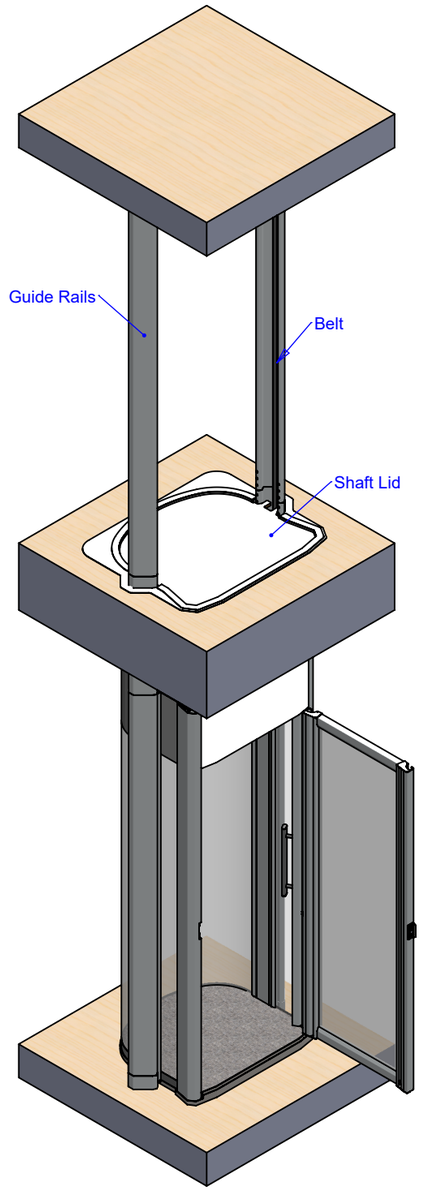

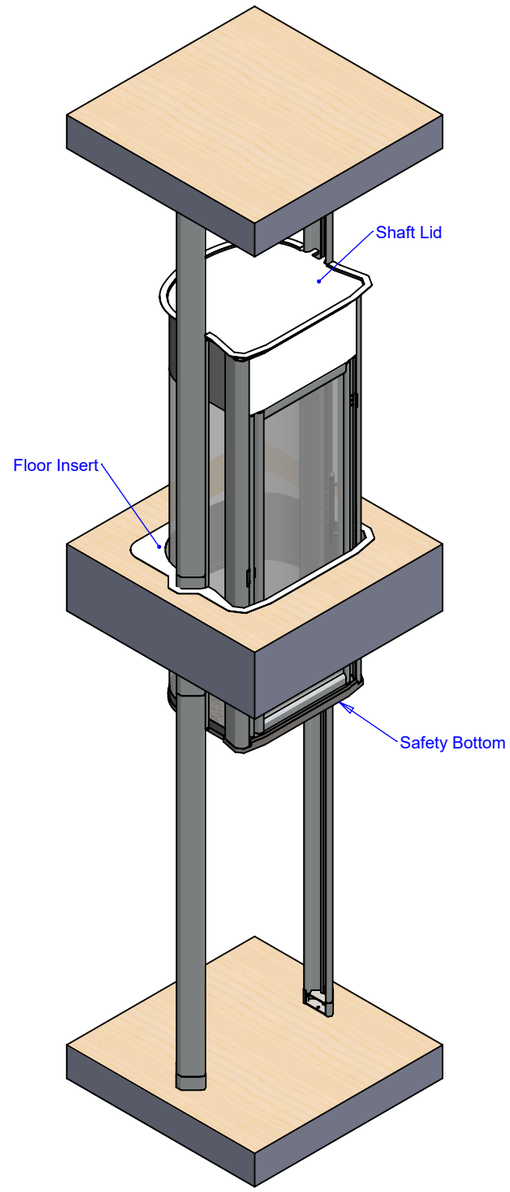

	NAME	SIGNATURE	DATE	TITLE:
DRAWN	Irmantas B.			
				DWG NO. EMB100 Dimensions — A3
barduva				SCALE:1:30 — SHEET 1 OF 1